LUXINAR
INGENUITY AMPLIFIED

Technical Data Multiscan® – Specification

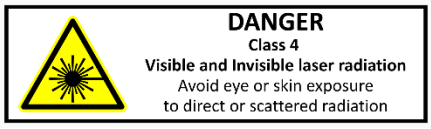

	Multiscan® HE 10i 10.6µm
Laser characteristics[1]	
Type	Sealed CO_2 RF excited slab
Wavelength[2]	10.6µm
Rated output power	125W
Peak power	315W
Minimum shipment power	150W
Typical shipment power	165W
Pulse energy range	5mJ to 100mJ
Pulse frequency range	500Hz to 50kHz
Duty cycle (maximum)	60%
Pulse width range	2 to 400µs
Optical rise/fall time[3]	<60µs
Polarisation[4]	Linear rotated
Performance	
Line speed (maximum)[5]	0-500m/min (static or 'on the fly' marking)
Characters/second (maximum)[6]	1200
Software	
Operating system	Windows 10 Embedded
Principal features	
- (Field types)	Fixed text, date/time with offset, custom date, incremental counters, operator fields, logos, barcodes, bitmaps, composite fields, shift field and external fields.
- (Control options)	Serial, Digital, Ethernet
Code characteristics	
Scan area (standard)	70mm/105mm/140mm/210mm/250mm
Character height	1mm – 50mm
Spot size ($1/e^2$ diameter)[7]	0.36mm
Beam pointing stability (half angle)	<0.25mRad
Display/Keypad	
Remote VGA display (colour) and Qwerty keypad	Standard
Fabrication	
Main enclosure	316 stainless steel
Laser enclosure	Silver anodised aluminium with optional stainless steel covers
Beam delivery	Silver anodised aluminium
Scan head	Silver anodised aluminium
Dimensions and weights	
Main enclosure	800mm(l) x 550mm(w) x 274mm(h)
Laser enclosure (without beam delivery or scanning head)	780mm(l) x 252mm(w) x 228mm(h)
ScanCube 14	133.5mm(h) x 99.5mm(w) x 122.8mm(d)
Weight – Main enclosure	53kg
Weight – laser enclosure (without beam delivery or scanning head)	40kg

© 2025

Electrical ratings

Voltage	230VAC ± 10% 50/60Hz. Single or bi-phase
Typical power consumption[8]	6A @ 230V

Cooling

Type	External water
Minimum flow rate	≥ 4L/min
Recommended flow rate	≥ 5L/min
Maximum pressure	6 bar
Refrigeration capacity	> 2.7kW
Temperature	19°C/66°F to 25°C/77°F ± 1°C (Above dew point)

Environmental

Lens Protection (air curtain)	20psig 25 litres/min, purified
Humidity	10 to 90% non-condensing
Storage temperature	-10 to +70°C
Sealing (main enclosure)	IP66
Sealing (laser enclosure)	N/A

Interface

Inputs	
Product detector	Two independent inputs for NPN or PNP 24 or 12VDC
Shaft encoder	Input for control of variable speed production lines, dual channel quadrature input, max 200kHz
Interlocks	Dual channel interlock, dual channel E-stop
System enable	Input for the provision of externally enabling or disabling the system
Extractor fault	Input for monitoring the status of the extractor
Remote control/File download	RS232, with Ethernet options
Outputs	
Product detector output	Two outputs for monitoring the two detector input signals
System on	Output for monitoring the on/off power
Ready to print	Output for monitoring the status i.e. Standby or Ready to Print
Product reject	Output for rejecting unmarked product
Shutter status	Two independent outputs for monitoring the safety shutter status
Extractor enable	Output to enable the extractor when the system is ready to print
Good mark	Output for monitoring of the status of each individual mark
Maintenance required	Output for indication that maintenance is required
System fault	Output for monitoring when the system has a fault

Options

7mm Aperture scanning head
10mm Aperture scanning head
20mm Aperture scanning head
Scanning lens focal lengths 75mm – 360mm
Articulated arm beam delivery

© 2025

Notes:

1. Power and energy is quoted at the point where the beam exits the laser enclosure. For each mirror in the beam delivery there is an expected loss of between 0.5% and 1%. Operating with the galvanometer head gives a further expected power loss of between 6% and 12%.
2. 10.6µm is the predominant wavelength. This can typically vary in the range 10.2µm – 10.7µm.
3. Rise and fall times are quoted between the 10% and 90% levels.
4. Polarization angle is dependent upon the type and orientation of the beam delivery.
5. Maximum line speed is assuming a single line 8-character code on an inked paper label. Please note that maximum line speed is dependent upon the nature of the material and the size/quantity/complexity of the mark.
6. Character generation speed in a single line format with a code height of 2mm. Faster generation speeds are possible at smaller code heights. Mark quality dependent upon character height, material and speed of marking.
7. Operating with 14mm aperture head, 250mm focal length lens.
8. Typical average power consumption assumes a 50% coding duty cycle.

Please note that while every effort has been made to ensure that the data given in this document is accurate, the information, figures, illustrations, tables, specification and schematics contained herein are subject to change without notice.

MULTISCAN is a registered trade mark (in the UK, EU and elsewhere) owned (in the UK, EU and elsewhere) by Luxinar Ltd, and must not be used without permission from the owner.

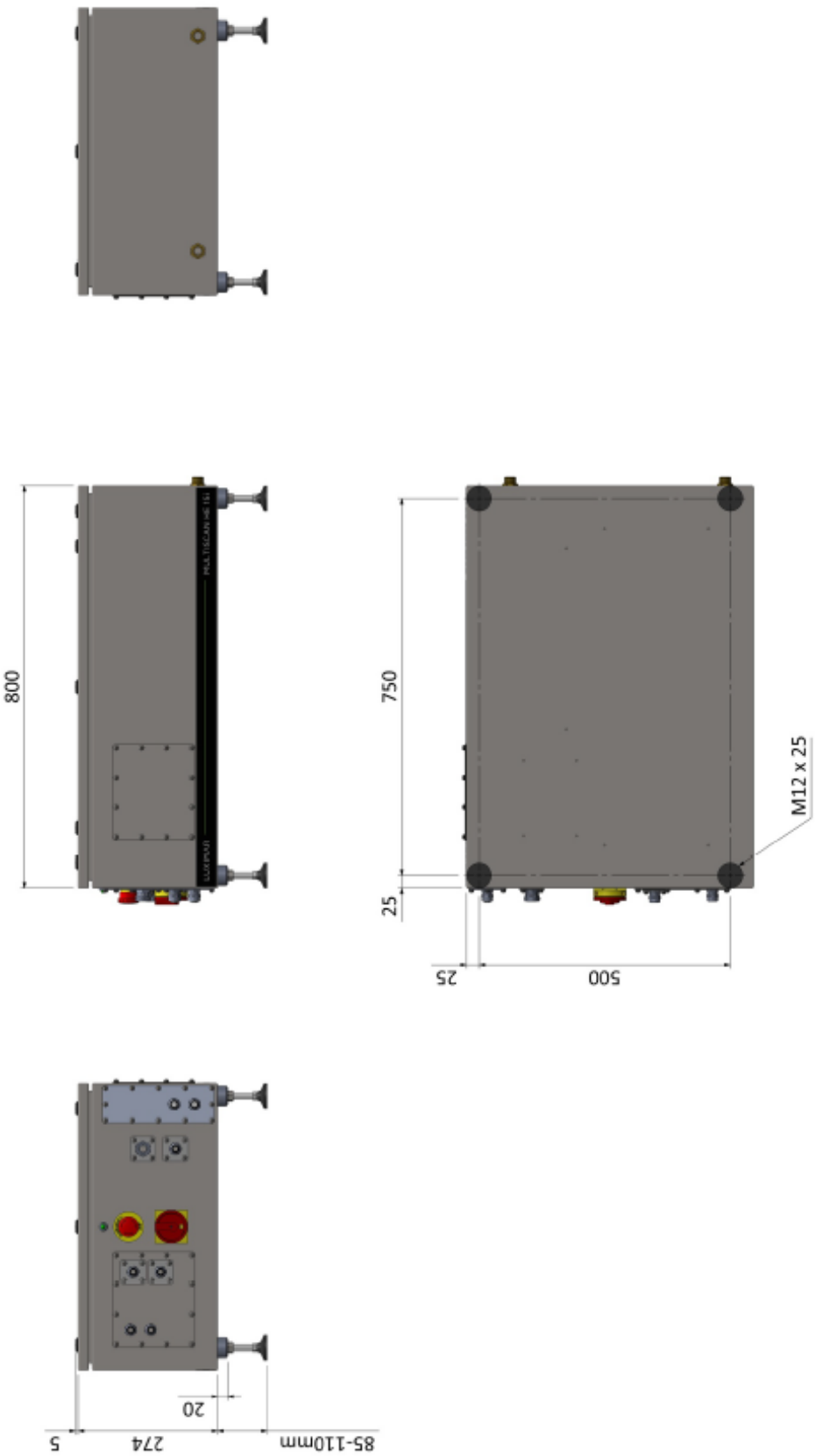

Multiscan® HE 10i – main enclosure

Note: Four mounting positions M12 x 25mm depth are provided. The enclosure can be supplied with adjustable feet, as shown.

© 2025

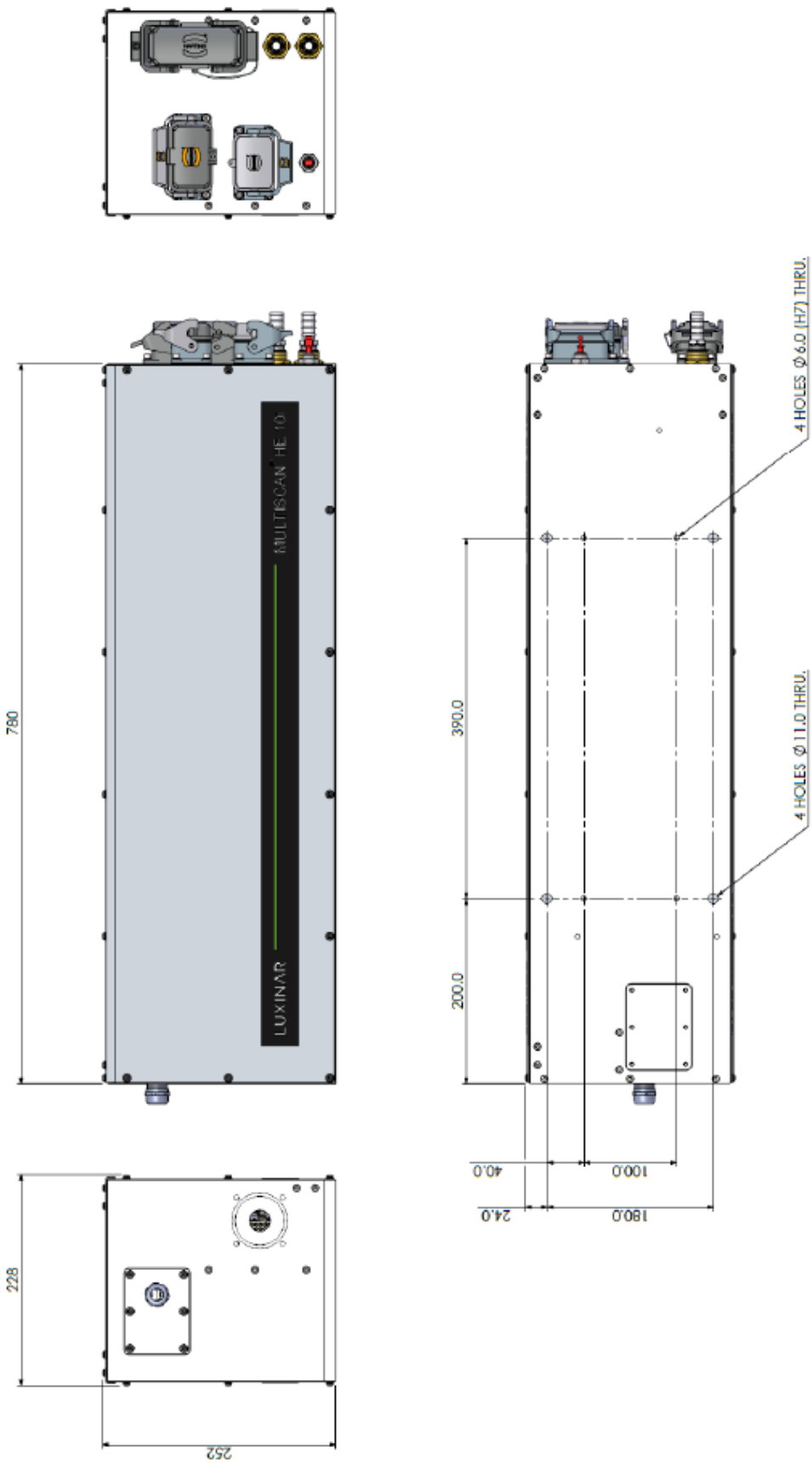

Multiscan® HE 10i – laser enclosure (without beam delivery)

© 2025

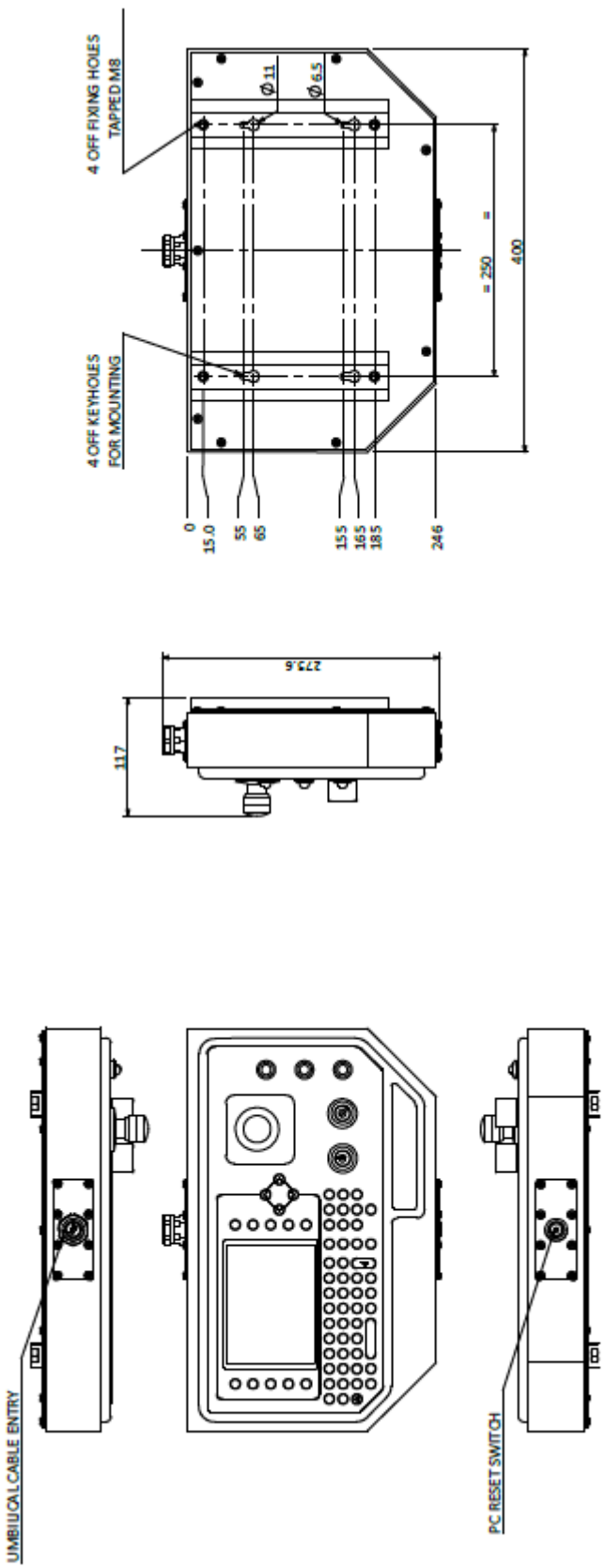

Control panel

Note: The control panel is supplied with a 5m umbilical cable for connection to the main enclosure.

© 2025